OPERATION MANUAL

SDS 9414I HPLC Pump

TABLE OF CONTENTS

PICTURE INDEX

1. STANDARD ACCESSORIES

1.1 STAINLESS STEEL VERSION

- 1 piece HPLC Pump SDS 9414I
- 1 piece Operation Manual
- 1 piece Power Cord
- 2 pieces Fuses 0.5 A for 220 V; 1.0 A for 110 V
- 1 piece Wrench ¼" x 5/16"
- 1 piece Wrench 13 x 15 mm
- 1 piece Allen Wrench 3 mm
- 1 piece Allen Wrench 2.5 mm
- 2 pieces Fittings with Ferrules (Stainless Steel)
- 1 piece Plastic Syringe
- 1 piece PTFE Tubing 1.6x3.2 mm I.D. for the pump suction capillary tube
- 1 piece Capillary Tube (Stainless Steel)

1.2 PEEK VERSION

- 1 piece HPLC Pump SDS 9414I
- 1 piece Operation Manual
- 1 piece Power Cord
- 2 pieces Fuses 0.5 A for 220 V; 1.0 A for 110 V
- 1 piece Wrench ¼" x 5/16"
- 1 piece Wrench 13 x 15 mm
- 1 piece Allen Wrench 3 mm
- 1 piece Allen Wrench 2.5 mm
- 2 pieces Hexagonal Fittings (PEEK)
- 2 pieces Double Cone (PEEK)
- 1 piece Plastic Syringe
- 1 piece PTFE Tubing, 1.6 x 3.2 mm I.D. for the pump suction capillary tube
- 1 piece Capillary Tube, 0.25 x 1.59 mm (PEEK)

2. SAFETY INSTRUCTIONS

The manufacturer, does not warrant for any defects or damage resulting from incorrect operation and maintenance, non-observance of the manual's instructions and negligence during installation.

Before putting the instrument into operation, read the manual carefully and should there be any further questions, please get in contact with your supplier.

2.1 GENERAL ELECTRICAL HAZARDS

- Check actual line voltage to confirm that the set voltage (on the rear side; voltage selector and fuse carrier) of the instrument is correct.
- Before changing the instrument's voltage or before changing defect fuses, disconnect the instrument from all power sources.
- The instrument has to be plugged into grounded wall sockets only.
- This instrument can be used only with other instruments which comply with the general safety regulations.
- Connect all cable connections before switching on the instrument.

2.2 GENERAL PRECAUTIONS

- In order to avoid any damages, perform periodic leak checks on all installed supply lines.
- The instrument is only allowed to be used for applications with specifications described in this manual.
- For toxic solvents, follow a regulated and approved waste disposal program. Never dispose of such products through the municipal sewage system.
- The instrument is suitable for operation between 10° C and 35° C surrounding temperature.
- Flammable fluids are not to be used with this instrument.

3. TECHNICAL SPECIFICATIONS

Flow Rate	**Micro**:	0.02 – 4.00 ml/min
	Analytical:	0.05 – 9.95 ml/min
	Semi-Preparative:	0.20 – 40.0 ml/min
Pump Head Material:		Stainless Steel, PEEK, or Titanium
Pulsation:		less than 1.0 %
Flow Accuracy:		less than 0.1 %
Flow Precision:		less than 1.0 %
Max. Pressure		40 MPa (400 bar)
Display:		Alphanumeric, 2x20 characters LCD
Compressibility Factor:		selectable from 0.7 to 1.0
Operation Mode:		constant flow or constant pressure
Remote Control	**Analog:**	Flow Rate (0-10V)**;** Start, Stop
	Digital:	RS232
Programmable Runtime:		00:01 to 99:59 h
Programmable Delay Time:		00:01 to 99:59 h
Safety Control:		Min./Max. Pressure
Power Supply:		220/110 Volt; 50/60 Hz
Dimensions:		258 x 148 x 350 mm
Weight:		8 kg

4. GENERAL DESCRIPTION

4.1 WORKING PRINCIPLE

The HPLC Pump SDS 9414I is a dual piston solvent delivery system. The mechanism is designed with short piston stroke technology and only two check valves. This results in the low pulsation of a dual piston pump combined with the reliability of a single piston pump. Difficulties in solvent delivery systems caused mainly by malfunctioning of the valves.

The delivery piston of the standard analytical unit works with a 2 mm stroke length, the compensation piston with 1 mm. The nearly pulse less solvent delivery of the SDS 9414I results from the high stroke frequency and the use of the compensation piston. The two pistons are contra rotating installed.

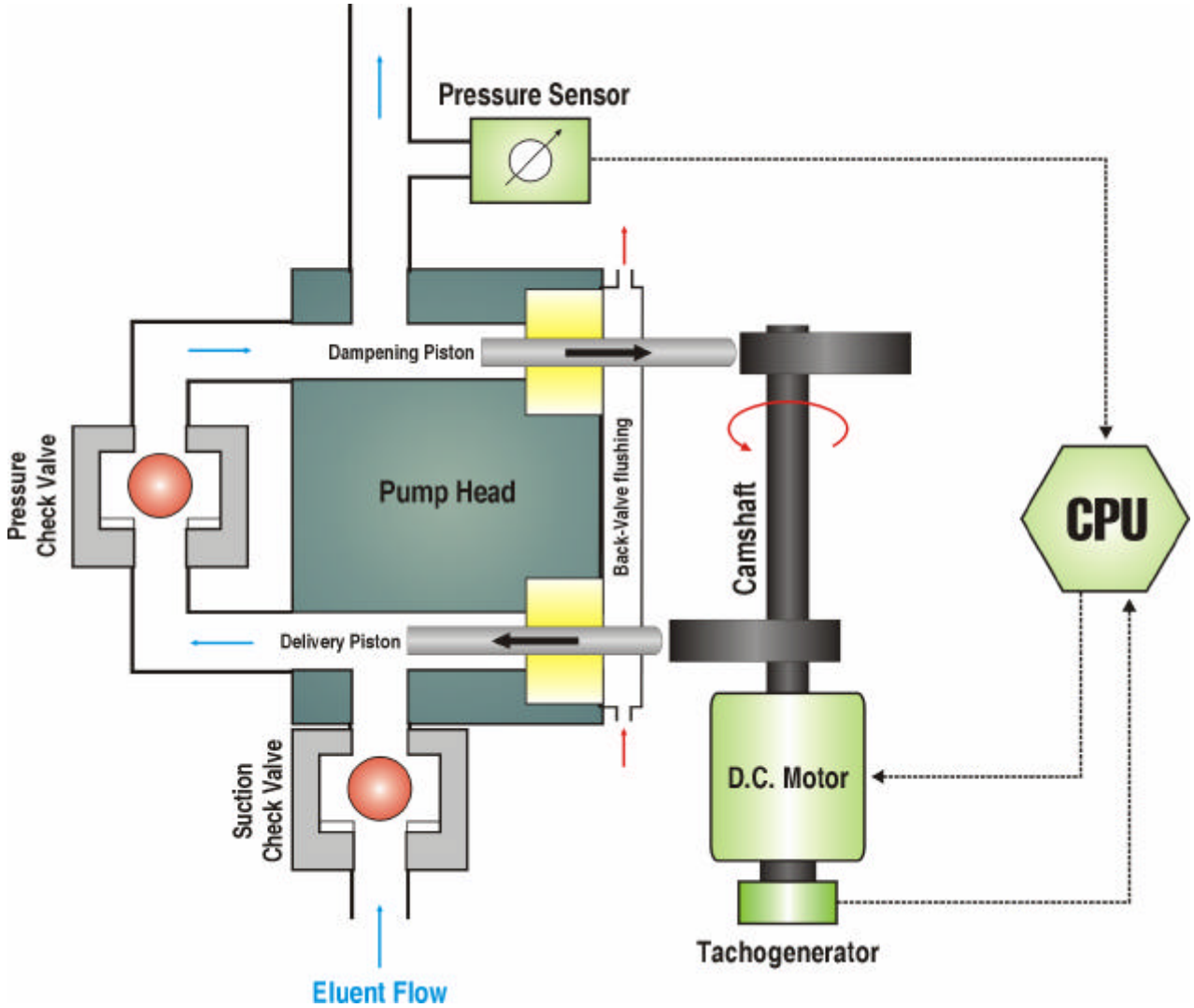

Picture 1: Working Principle

While the delivery piston pushed the solvent volume out, the compensation piston, located on the pressure side, collects half of the volume. During return movement of the delivery piston, the collected volume is pumped from the compensation. The microprocessor controlled speed regulation leads to a highly stable speed of the D.C. motor. Contrary to standard regulators, the microprocessor is able to correct continuously the compressibility of the eluents through a computerized program. This results in a constant volume delivery throughout the entire delivery range.

The microprocessor technology also offers the possibility to handle the programming, application and controlling of an instrument in a simple manner. Through the alphanumeric display the instrument parameters are shown in clear letters. The user can easily control or change the data. To simplify operation, the function keys are kept at a minimum.

There is basically the choice between two operation modes. The delivery with “constant flow” and the delivery with “constant pressure”. According to the individual modes, the following parameters can be programmed:

- Constant Flow in ml/min
- Constant pressure in MPa
- Min. Pressure Threshold
- Max. Pressure threshold
- Maximum Flow
- Compressibility Factor
- Max. Run Time
- Delay Time
- Programmable Start Delay
- Programmable Stop Delay

The HPLC pump is equipped with a built-in diagnostic system. This continuously controls the following parameters:

- Power Failure
- Program Memory
- Max./Min. Pressure
- Max. Flow
- Motor Function

Illogical data entered by the operator will be ignored by the processor’s logic control and signalized by flashing the display.

4.2 FRONT SIDE VIEW

All parts necessary for the operation are positioned on the front side of the instrument.

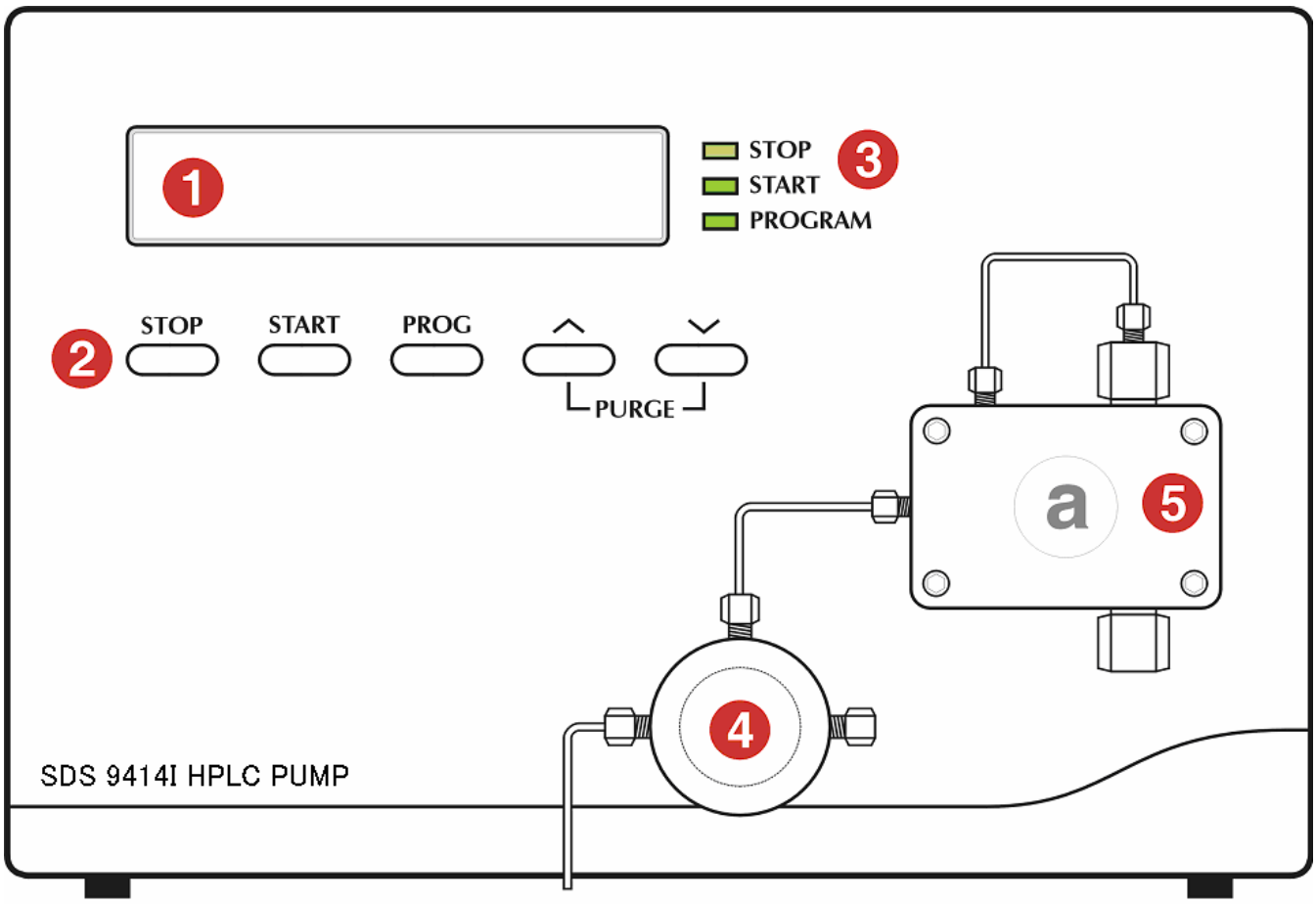

Picture 2: Front Side View

1 2x20 Character LCD
2 Keyboard
3 Status Indicator Lights
4 Relief Valve
5 Pump Head

4.2.1 PUMP COMPONENTS

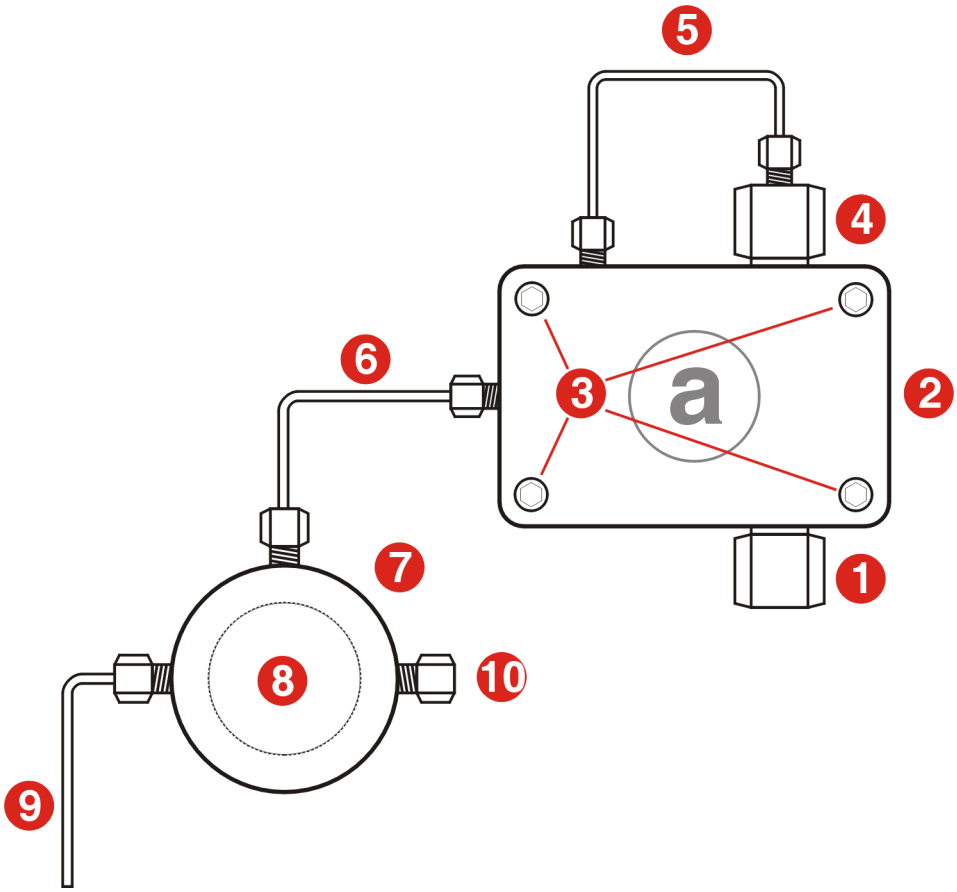

Picture 3: Pump Components

1 Suction valve housing (connect from eluent reservoir)
2 Pump head (letter on pump head denotes type: a = analytical; m = micro; p = preparative)
3 Mounting screws (4)
4 Pressure valve housing
5 Connecting capillary – damping piston
6 Connecting capillary – pressure sensor
7 Purge valve
8 Venting screw (PEEK)
9 Drain capillary (Purge valve)
10 Solvent outlet (connect to injector)

4.3 REAR PANEL VIEW

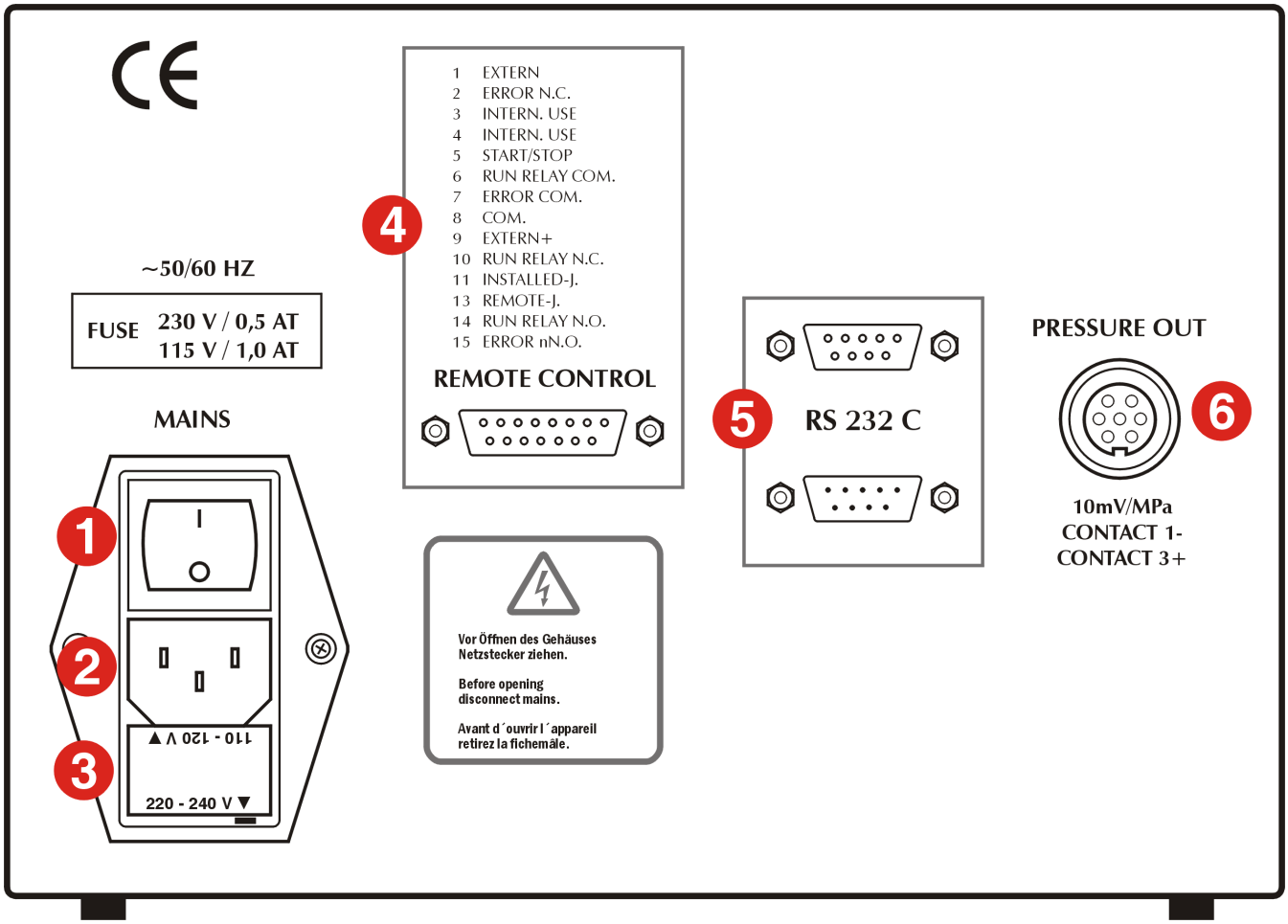

Picture 4: Rear Panel

1 Main Switch
2 Power Cord Plug
3 Fuse Carrier w. Voltage Selector
4 REMOTE CONTROL connector (15 pins)
5 RS-232 Connector
6 PRESSURE OUT Connector

4.4 FUNCTION CONNECTORS

4.4.1 REMOTE CONTROL (4)

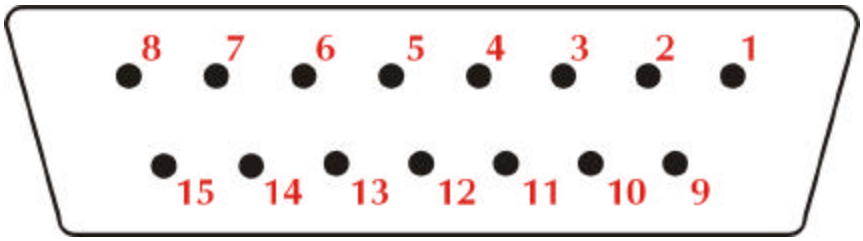

PIN	FUNCTION
1	EXTERN -
2	ERROR N.C.
3	Internal use
4	Internal use
5	START /STOP
6	RUN RELAY COM
7	ERROR COM
8	COM
9	EXTERN +
10	RUN RELAY N.C.
11	INSTALLED-J
12	HIGH PRESSURE J.
13	REMOTE J.
14	RUN RELAY N.O.
15	ERROR N.O.

4.4.2 RS232 SERIAL INTERFACE (5)

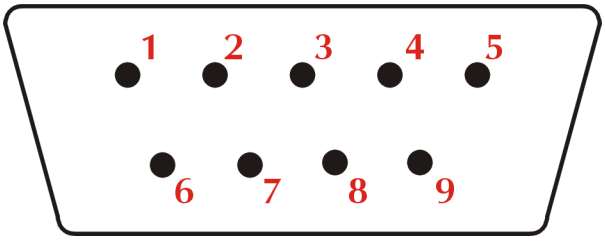

PIN	FUNCTION
1	DCD
2	RXD
3	TXD
4	DTR
5	GND
6	DSR
7	RTS
8	CTS
9	RI

4.4.3 PRESSURE CONNECTOR (6)

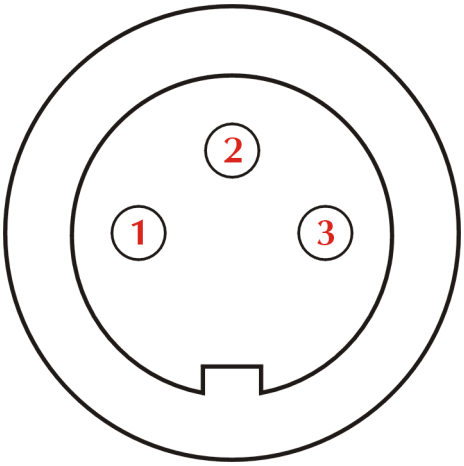

PIN	FUNCTION
1	Pressure -
2	-
3	Pressure + (10 mV / 1 MPa)

5. MENU DESCRIPTION

5.1 OVERVIEW

The menu dialog can be activated if the pump is in the standby mode; indicated by the STOP LED. To activate, push the [**PROG**] key. The program menu can be stepped through by using the [**PROG**] key. The programming cycle can be terminated at any time by pushing the [**STOP**] key.

5.1.1 INPUT OF PARAMETERS

The input and any change of existing parameters is done interactively.

If values have to be set or changed, this can be done by using the [▲] key for increasing the number and using the [▼] key for decreasing the number. By pushing the [▲] or [▼] key for a short time, the value will change with the smallest possible increment. By keeping the key pressed, the numbers will increase more rapidly.

5.2 FLOW RATE

By pushing the [**PROG**] key the programming dialog is started. The display shows:

```
Constant Flow:
1.50 ml/min
```

The value for the flow rate can be set to any wanted number by using the [▲] or [▼] key.

By pressing once for a short time the value will change in 0.05 increments for the analytical head; in 0.01 increments for the micro head and in 0.2 increments for the preparative head.

By holding the [▲] or [▼] key pressed down the speed of changing the numbers will increase. By reaching the maximum possible flow rate for a mounted head, the value will not increase anymore and the display will start to twinkle.

When the flow rate is set to 0.0 ml/min, the pump is set to CONSTANT PRESSURE mode. In this case, the next two menus can be switched through to set the CONSTANT PRESSURE mode parameters.

After the correct flow rate is selected, the [**PROG**] key has to be pushed again. This fixes the set value in the memory and switches the program to the next step.

5.2.1 CONSTANT PRESSURE

By pushing the [**PROG**] key the programming dialog is switched to the next menu. The display shows:

```
Constant Pressure:
 1.0 MPa
```

By pushing the [**PROG**] key this value will be fixed into the memory and the next program step is called up.

5.2.2 MAXIMUM FLOW

By pushing the [**PROG**] key the programming dialog is switched to the next menu. The display shows:

```
Maximum Flow:
1.00 ml/min
```

This step is built in as a safety feature to avoid any damage of the analyzer by reaching a too high flow rate.

The desired maximum flow rate can be set by using the [▲] or [▼] key.

5.3 MINIMUM PRESSURE THRESHOLD

By pushing the [**PROG**] key the programming dialog is switched to the next menu. The display shows:

```
Minimum Pressure:
   .0 MPa
```

At this step the minimum pressure level can be set. Any value from 0.0, but no higher than the maximum level. A practical level is a value of about 20 % of the normal operation pressure.

After setting the wanted level by using the [▲] or [▼] key, the [**PROG**] key has to be used to fix this value in the memory and to activate the next program step.

5.4 MAXIMUM PRESSURE THRESHOLD

By pushing the [**PROG**] key the programming dialog is switched to the next menu. The display shows:

```
Maximum Pressure:
40.0 MPa
```

These 40 MPa (400 bar or 6000 PSI) are indicating the pressure of the pump. The maximum pressure level should be set to a level which ensures to avoid any damage of the whole HPLC-system if a blockage of any part may occur. Always the weakest part has to be used for selecting the correct level.

The selected maximum level has to be set by using the [▲] or [▼] key. The maximum level cannot be set to a level below the low pressure level.

Activation of the [**PROG**] key stores the value into the memory and activates the next programming step.

5.5 COMPRESSIBILITY

By pushing the [**PROG**] key the programming dialog is switched to the next menu. The display shows:

```
Compressibility:
1.00
```

The pump software contains a calculation program for correcting the pressure depending on compressibility of solvents. The factor **1.0** has to be set when compressible solvents like water are used. (For further details see ***8. Compressibility***). For changing the factor, which can be set from 0.5 to 1.0, the [▲] or [▼] keys have to be used.

After selecting the correct factor, the [**PROG**] key has to be pushed to fix this value into the memory and to call up the next programming step.

5.6 ANALYSES TIME

By pushing the [**PROG**] key the programming dialog is switched to the next menu. The display shows:

```
Analyses Time:
AT  0: 0
```

As the pump is able to count times, the requested run time can be selected in this step. If the time is set to **0:0** the pump will start to run after pushing the [**START**] key and will stay under this condition until the [**STOP**] key will be pushed.

If a time is selected, e.g. for a run time of 15 minutes "0:15", the display will show this value after starting the pump by pushing the [**START**] key. The preset value will count down to "0:0". After reaching zero the pump will stop automatically. A relay closure contact, available through the interface connector can be used to stop also the peripheral equipment.

The analyses Time can be selected by using the [▲] or [▼] key for a time range from 00:01 to 99:59 h:min. The time will be fixed into the memory and the next program step is selected by pushing the [**PROG**] key.

5.7 DELAY TIME

By pushing the [**PROG**] key the programming dialog is switched to the next menu. The display shows:

```
Delay Time:
DT:  0: 0
```

Similar to the **Analysis Time** a **Delay Time** can be programmed. This **Delay Time** can be selected from **00:01** to **99:59 h:min**. The display will show the pre-selected value after pushing the [**START**] key and will count down to **0:0**. After reaching zero, the pump will start to run. During the delay time the green LED within the [**START**] key will twinkle.

A relay closure contact, available through the interface connector, can be used to start also the peripheral equipment. For setting the correct **Delay Time** the [▲] or [▼] key has to be used, and the [**PROG**] key to fix the value into the memory and to activate the next programming step.

5.8 START DELAY TIME

By pushing the [**PROG**] key the programming dialog is switched to the next menu. The display shows:

```
Start Del.: 0: 0 min:sec
```

The HPLC pump SDS 9414I has a built-in start delay time function which protects and therefore prolongs column's durability as a careful increase of pressure onto the column is possible.

During the start delay time operation, the display shows the symbol "**^**" right before the **RT**.

The start delay time can be selected for a time range of up to 2 min 30 sec at a maximum.

The time value is selected by using the [▲] or [▼] key. The [**PROG**] key has to be pushed to fix the value into the memory and to activate the next programming step.

5.9 STOP DELAY TIME

By pushing the [**PROG**] key the programming dialog is switched to the next menu. The display shows:

```
Stop Del.:  0: 0 min:sec
```

The HPLC pump SDS 9414I has a built-in stop delay time function which protects and therefore prolongs column's durability as a careful decrease of pressure onto the column is possible.

During the stop delay time operation, the display shows the symbol "**v**" right before the **RT**.

The stop delay time can be selected for a time range of up to 2 min 30 sec at a maximum.

The time value is selected by using the [▲] or [▼] key. The [**PROG**] key has to be pushed to fix the value into the memory and to leave the PROGRAMMING MODE.

6. INSTRUMENT SETUP

6.1 CHECK VOLTAGE

Before connecting the pump to the mains, check the voltage shown on the type plate on the rear of the instrument. This voltage should be identical with the voltage of the existing power source. If the voltage is correct, connect the instrument with the enclosed power cord.

If necessary, the voltage has to be changed accordingly:

- pull out the voltage selector
- check the fuses inside the fuse carrier; if necessary exchange the fuses (the needed fuse type is printed on the back panel of the instrument; 0.5A for 220V, 1.0A for 110V)
- Turn the voltage selector back in the power supply connector; make sure that the small arrow points to the right voltage

6.2 CAPILLARY CONNECTIONS

- Connect the enclosed PTFE tubing (1.6 x 3.2 mm I.D.) to the pump's suction inlet. Put the end of the PTFE tubing into your eluent reservoir.
- Connect the relief valve outlet to the injection valve and/or autosampler with the enclosed stainless steel/PEEK capillary.
- then the pump can be switched on
- connect the enclosed plastic syringe to the outlet capillary of the relief valve.

6.3 PRIMING THE PUMP

During the final quality control the pump is tested with Propanol. When setting up for operation and later when changing solvents, care must be taken to ensure solvent miscibility to avoid malfunctioning of the check valves. When changing immiscible solvents e.g. methanol-hexane, the pump should be flushed with an intermediate solvent that is miscible with both, e.g. chloroform.

The solvents should be degassed carefully before use, as air bubbles within the pump head will create an unstable delivery of solvents by the pump. The most effective way of degassing is by bubbling helium through the solvent. Storing the solvents at 0.5 to 1 bar after degassing, a steady flow from the pump will be ensured. Under these conditions the solvents will be delivered to the pump inlet better than by gravity alone. Sucking of eluents by the pump may create air bubbles in the tubing. If helium is not available, heating of the solvent and stirring, as well as ultrasonic treatment are also very well tested methods for solvent degassing. **Many problems associated with HPLC-systems arise from insufficiently degassed solvents.**

Open the relief valve (one turn counter-clockwise). Then, with the help of the syringe, suck on slowly approx. 10 ml solvent. Afterwards, remove the syringe and flush by using the purge

function (pressing the up and down key at the same time) with approx. 20 ml solvent. Close the relief valve (clockwise) and the pump is ready for operation.

The priming of the pump with the help of a syringe as described above will only work as long as the whole system is closed, e.g. the capillary tube between the pump head and the sample injection valve has to be in place.

7. INSTRUMENT OPERATION

The SDS 9414I HPLC pump will be programmed in dialog through the alphanumeric display. All the programmed data is protected against power failure by battery backup of the memory. Once the pump is programmed, the parameters need not to be reentered as long as the same setup is used.

7.1 OPERATION CONDITIONS

The SDS 9414I HPLC pump is always in one of 4 possible operation conditions. The individual conditions are outlined below.

STANDBY

The SDS 9414I is in STANDBY when its STOP LED is on. The pump is set to STANDBY when the [**STOP**] key is pressed.

RUN

When the instrument is in RUN, the START LED is on. The SDS 9414I is set to RUN when the [**START**] key is pressed.

PROGRAMMING

The instrument is in PROGRAMMING when the menu is displayed in the screen; the PROGRAM LED is turned on. The PROGRAM condition is entered by pressing the [**PROG**] key while the pump is in STANDBY mode.

ERROR

Any error message will be indicated by an acoustic signal and the description of the error is displayed on the screen. Before normal operation can be resumed, the error message must be cleared with the [**STOP**] key.

7.1.1 ERROR MESSAGES

The following error message may be displayed on the screen.

POWER DOWN ERROR

The POWER DOWN ERROR indicates a power failure of more than 1 minute when the POWER DOWN MODE is turned on.

MINIMUM PRESSURE ERROR

The MINIMUM PRESSURE ERROR indicates that the pressure dropped below the preselected minimum pressure level for more than 1 minute. If there is no increase above the preset level during this time, the pump will stop to run and the display will show:

```
Error:
Minimum Pressure
```

Beside this optical signal an error message is activated through the interface to the controller, if this one is connected. Further, a long acoustic signal is given, which lasts for about 30 seconds. The error can be cleared by pressing the [**STOP**] key.

MAXIMUM PRESSURE ERROR

The MAXIMUM PRESSURE ERROR indicates that the pressure exceeded the preset maximum pressure level. If the pressure is exceeding the set maximum level, the pump will stop immediately and the display is showing:

```
Error:
Maximum Pressure
```

Furthermore, an error message is available through the interface connector. A long acoustic signal is given, which lasts for about 30 seconds. The error can be cleared by pressing the [**STOP**] key.

FLOW ERROR

A FLOW ERROR indicates that the flow rate exceeded the preselected maximum flow rate during the constant pressure operation.

7.2 OPERATION MODES

The SDS 9414I can be operated in 2 different modes: Constant Flow and Constant Pressure. In Constant Pressure mode the pump keeps the pressure constant by adjusting the flow.

7.2.1 CONSTANT FLOW MODE

In Constant Flow mode, the pump delivers with a constant flow rate.

```
C. Flow: 1.00 ml/min
 3.6 MPa    RT  0: 0
```

Picture 5: Status Display - Constant Flow Mode

The following information is shown in the Status Display:

- **C. Flow** This indicates that the instrument is running in CONSTANT FLOW mode.
- **MPa** This stand for the measured pressure in Mega Pascal (1 MPa = 10 bar)
- **RT** This stands for the run time and measures the elapsed time in the form h:min since the pump was started. The same position on the display may also show **AT** or **DT**.
  - **AT** This stands for the analysis time which has been preselected by the operator. This time preset by the operator counts down to zero and then stops the pump.
  - **DT** This stands for delay time. The delay time has to be preset by the operator and indicates the time after which the pump will start automatically. This time counts down from the preset time to zero. After reaching zero the pump will start to run.

    During this wait cycle, the flow rate will be gradually increased from 0 o the selected flow rate.
- **^ RT** A “^” symbol in front of **RT** stands for start delay time.
- **v RT** A “v” symbol in front of **RT** stands for stop delay time.

The pump can be started by using the [**START**] key. It can be stopped and set to STANDBY by using the [**STOP**] key. Use the [**PROG**] key to enter the menu.

7.2.2 CONSTANT PRESSURE MODE

If this mode is selected the pump delivers the volume at a constant pressure during a set period of time. The constant pressure mode can be selected by setting the value for constant flow during programming to 0.0 ml/min.

```
C. Press.:   3.0 MPa
1.20 ml/min RT  0: 0
```

Picture 6: Status Display - Constant Pressure Mode

The following information is shown in the Status Display:

- **C. Press** This indicates that the instrument is running in CONSTANT PRESSURE mode.
- **MPa** This stand for the measured pressure in Mega Pascal (1 MPa = 10 bar)
- **RT** This stands for the run time and measures the elapsed time in the form h:min since the pump was started. The same position on the display may also show **AT** or **DT**.
  - **AT** This stands for the analysis time which has been preselected by the operator. This time preset by the operator counts down to zero and then stops the pump.
  - **DT** This stands for delay time. The delay time has to be preset by the operator and indicates the time after which the pump will start automatically. This time counts down from the preset time to zero. After reaching zero the pump will start to run.
- **^ RT** A “^” symbol in front of **RT** stands for start delay time.
- **v RT** A “v” symbol in front of **RT** stands for stop delay time.

The pump can be started by using the [**START**] key. It can be stopped and set to STANDBY by using the [**STOP**] key. Use the [**PROG**] key to enter the menu.

7.3 POWER DOWN FEATURE

In case of power failure, the pump software can react differently. If the power failure lasts less than one minute, the pump will start automatically again, as soon as the power is reconnected.

After a power failure which lasted longer than 1 minute, the operator can decide whether to continue or abort the operation. To select the power down mode, execute the following steps:

- turn off the main switch.
- press the [**STOP**] key and switch the main switch on again. Keep the [**STOP**] key pressed until the display indicates that the power is on. Skip the first menu screen with the [**PROG**] key.
- the display will show: **Power Down Abort 0** (or 1)

```
Power Down Abort:  0
```

- use the [▲] or [▼] key to select the desired function:

  If the number **1** is selected, the pump will show an error message and won't start again.

  If the number **0** is selected, the pump will start again after a power failure.
- After the power down mode is selected, the [**STOP**] key has to be pushed to switch back into the standby condition.

8. COMPRESSIBILITY

A general problem for constant flow delivery with piston pumps is the compressibility of the solvents under pressure.

Any liquid shows a specific volume elasticity. If the liquid is influenced by pressure changes Δp, the volume will change by ΔV. The volume V will become the same as before, if the pressure will be reduced to the original value again. The dimension of the change in volume is the compressibility.

This can be shown as:

$$\textbf{Compressibility} = \frac{\textbf{relative change of the volume}}{\textbf{the necessary pressure change}}$$

therefore:

$$K = \frac{-1}{V} \times \frac{\Delta V}{\Delta p}$$

The constant volume delivery can be seen as a stepwise displacing of liquid out of the pump head. The dimension for the volume delivery is the amount of piston volume during a period of time. But this is only correct as long as the delivery is done without any added pressure. As soon as the liquid delivery has to be done against a back pressure, a specific amount of the piston volume has to be used for compressing the liquid first, before the actual delivery can start.

This can be described by the following diagram:

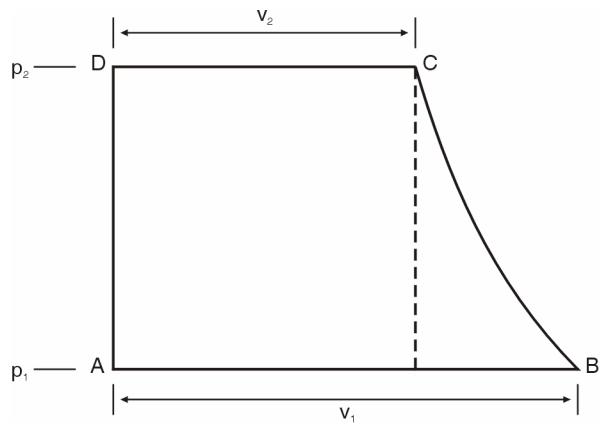

V_1	suction volume	**p_1**	suction pressure
V_2	delivery volume	**p_2**	delivery pressure

A to B: suction of liquid during pressure p1
B to C: compressing the liquid from p1 to p2
C to D: delivery against pressure p2
D to A: changing from delivery to suction

The compressibility will effect the constant of the liquid delivery depending on the pressure. To overcome this problem, the S 2100 is using a calculation program to correct the pressure depending change of the flow rate. This calculation program corrects the compressibility as well as the always existing leakage rate of the check valves, in relation to the actual pressure. The processor is checking the back pressure every 0.1 seconds and corrects the piston speed accordingly.

The calculation program is using the liquid with the smallest compressibility (water) as a factor of 1.

As different organic solvents are showing a different compressibility, the processor needs this information for the most accurate delivery rate. This information can be added through the Compressibility Factor in the ANALYSIS PROGRAM dialog. As water has been normalized to the factor of 1, all others have to be smaller than 1.

The following table shows the Compressibility Factors of the mostly used solvents:

Solvent	Compressibility Factor
Water	1.00
Methanol	0.63
Ethanol	0.74
Propanol	0.72
Butanol	0.75
Acetonitril	0.68
Chloroform	0.58
Methanol:Water (1:1)	0.79
Ethanol:Water (1:1)	0.88
Ethanol:Water (3:1)	0.79
Buffer Solutions	1.00

For solvent mixtures of different organic solvents, the constant can be calculated by adding the constants of the different solvents in relation to their percentage in the mixture.

For example: 50% H_2O, 20% Methanol, 30% Acetonitril

$F = 0.5\ F(H_2O) + 0.2\ F\ (\text{Methanol}) + 0.3\ F\ (\text{Acetonitril})$

$F = 0.5 \times 1 + 0.2 \times 0.63 + 0.3 + 0.68$

$F = 0.83$

For other solvents with an unknown factor, an average factor of 0.70 can be used. The difference from the correct delivery rate won't be higher than 5%. If this accuracy is good enough, a medium factor of 0.70 for all organic solvents and 1.00 for water can be used.

9. SERVICE & MAINTENANCE

The need of maintenance is limited to the mechanic of the pump.

It is recommended to oil all moving parts, as bearing and slide plates with sewing machine oil.

9.1 TROUBLESHOOTING

Problem	Cause	Elimination
No Flow	- no solvent	- check the level of the reservoir
	- gas bubbles in the inlet tubing or pump head	- flush the inlet tubing and the pump head by activating the purge function or using the plastic syringe to suck the air bubbles out via the relief valve.
	- solvent line interrupted	- check the solvent inlet tube and the solvent filter, clean or exchange the tube or filter
	- pump is not running	- check the fuses on the rear panel - check the main power connection - check the display concerning error messages - check if a start delay time is programmed
	- failure of the check valves	- clean the check valves by using an ultrasonic bath, or exchange the check valves
	- broken piston	- exchange the piston
Pressure Fluctuation	- gas bubbles in the pump head	- flush the inlet tubing and the pump head by activating the purge function or using the plastic syringe to suck the air bubbles out via the relief valve.
	- leakage in the system	- exchange or fasten the leaking parts
	- faulty check valve	- clean the check valves by using an ultrasonic bath, or exchange the check valves
	- piston seal leaking	- exchange the piston seal
	- imminiscible solvents in the pump	- use an intermediate solvent which mixes with both solvents
No Pressure	- faulty check valves	- clean the check valves by using an ultrasonic bath, or exchange the check valves
	- leakage in the system	- exchange or fasten the leaking parts

9.2 EXCHANGE OF PUMP HEAD

- disconnect the capillary tube (6) between the pump head (2) and the relief valve (7)
- remove the solvent suction tubing (connected to 1)
- loosen the four mounting screws (3) and remove the pump head

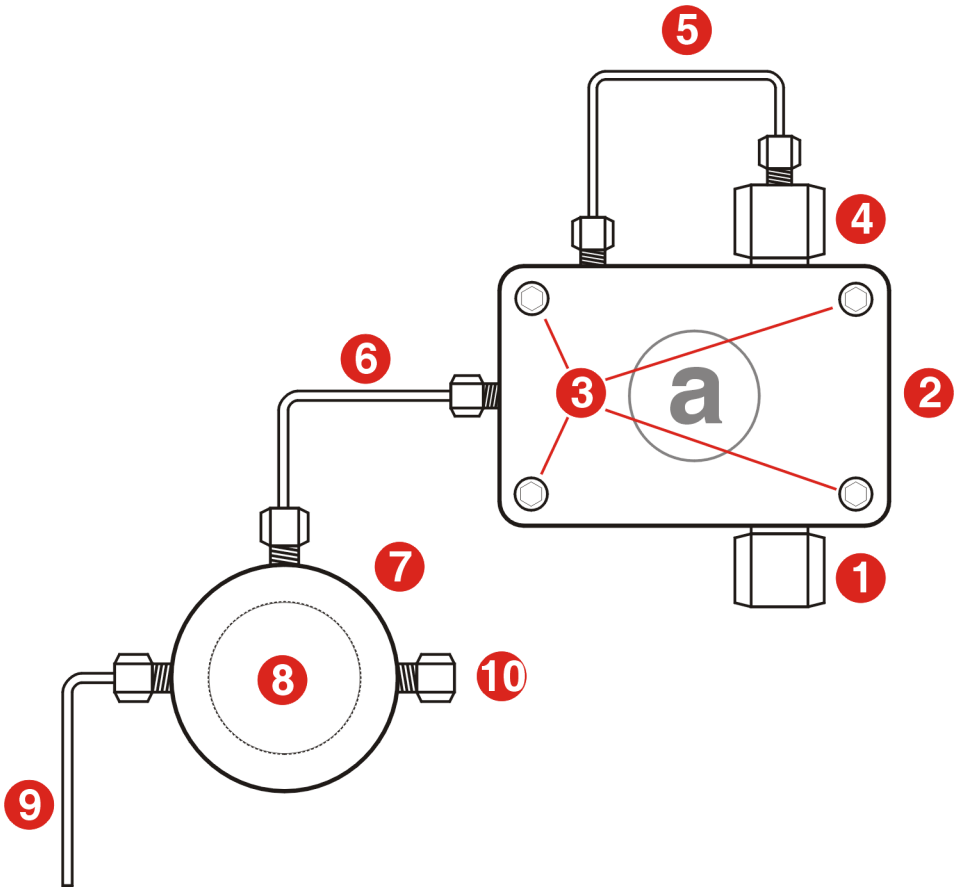

- the assembling of the pump head is done in the opposite sequence

9.3 PUMP HEAD ASSEMBLY

The following diagram shows all the components of the dismantled pump head:

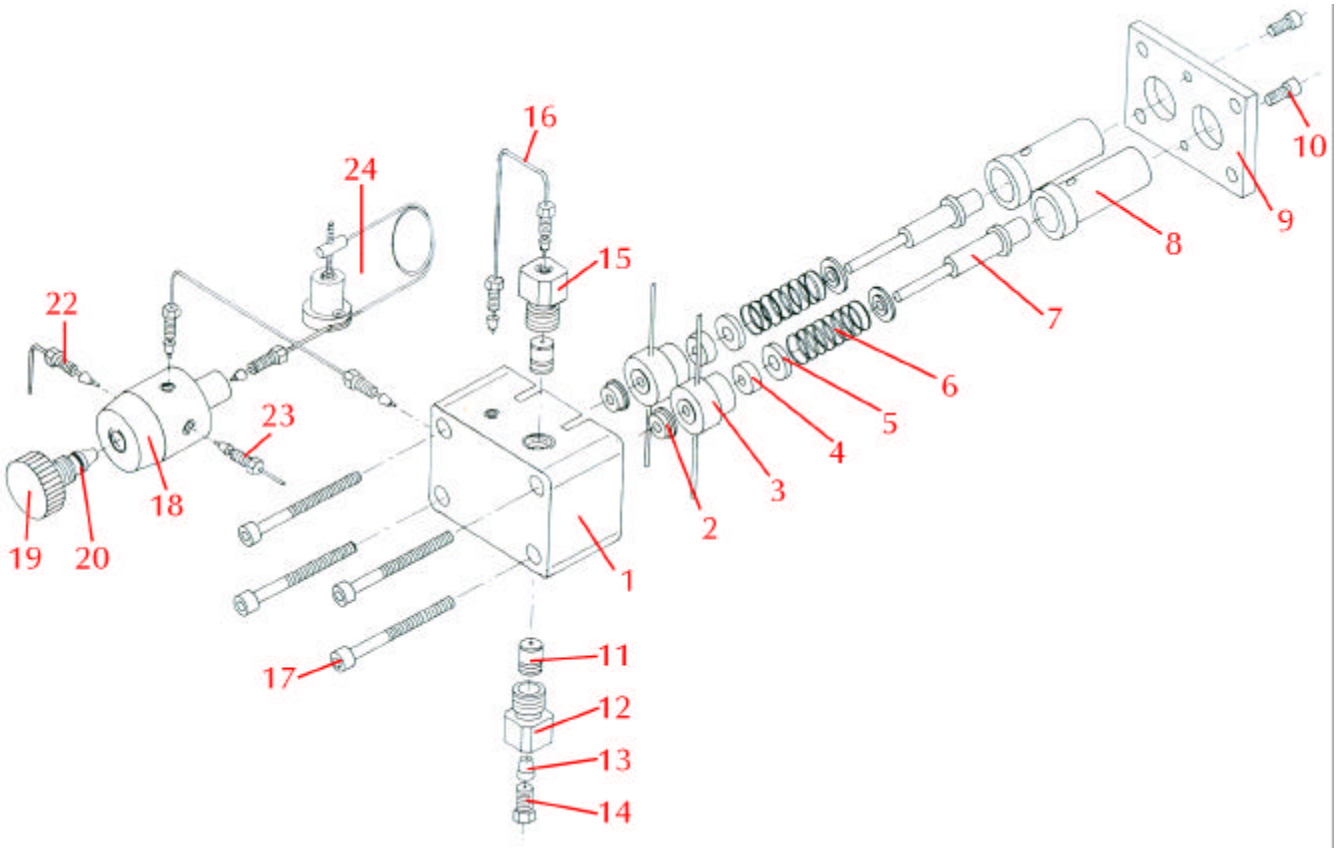

Picture 7: Pump Head Assembly

1	Pump head body	**13**	Ferrule 1/8"
2	Piston sealing ring	**14**	Thrust bolt
3	Piston guide with piston back flushing	**15**	Outlet valve housing (pressure side)
4	Secondary sealing ring	**16**	Capillary tube for connecting the damping piston
5	Centering disk	**17**	Hollow screws M4x45
6	Pressure spring	**18**	Relief valve block
7	Ceramic piston assembly	**19**	Venting screw
8	Guide bearing	**20**	Sealing ring: relief valve
9	Mounting plate	**21**	Capillary for connecting relief valve and pump head
10	Hollow screw	**22**	Drain capillary from relief valve block
11	Check valve cartridge	**23**	Solvent outlet
12	Inlet valve housing (suction side)	**24**	Pressure sensor

9.3.1 PISTON BACK FLUSHING

When using saliferous eluents, a growth of salt crystals is possible behind the piston ring on the sapphire piston. Under unfavorable working conditions, these salt crystals can lead to a higher wearing of the piston ring.

Generally, it is sufficient to rinse the rinsing chamber (between piston ring and secondary sealing ring) with distilled water once a week. The water remaining in the rinsing chamber stops the crystallization of salt crystals. Therefore, the lower capillary tubes should be connected together with PTFE tubing so that the water remains in the rinsing chamber.

The rinsing of the chamber should be done with the plastic syringe delivered with the instrument.

9.3.2 CHANGE OF PISTON RING

- Loosen the two hollow screws (10) for removing the mounting plate (9)
- take off the guide bearing, piston assembly, pressure springs and centering discs
- pull out the piston guide
- pull out the piston rings very carefully with the help of a pair of tweezers
- completely insert the new sealing rings into the opening (flange upward); the small spring has to show in direction of the pump head
- insert the piston guide upward with the secondary sealing ring (white)
- put the ceramic piston into the guide bearing, insert the spring with the centering discs in the piston and place the whole unit on the piston guide
- put the mounting plate on top and fasten it with the hollow screws (10)
- completely push down both pistons by hand for several times in order to check if the pistons were jammed during the process of assembling

9.3.3 REPLACING THE CHECK VALVES

The check valves are constructed as cylindrical cartridges.

The cartridges have sealing rings, made of PEEK mounted on both sides. These sealing rings have to ensure that the solvent will not bypass the check valve. Both valves, on the high and low pressure side of the pump are identical and therefore can be used for both sides.

Place the cartridge in the valve housing and fasten first by hand and then turn another half of a turn by using the 13mm wrench delivered with the instrument. If the pump is not delivering the correct flow rate, the valve housing might not be tightened enough. Before tighter fasting make sure, that the pump was carefully flushed.

9.3.4 CLEANING THE VALVE CARTRIDGES

Generally, the check valves cartridges don't wear. However, a deposit of dirt in the valve can influence the function. In this case, only a limited improvement will be achieved when cleaning

the fully assembled cartridge. The more dependable method is to dismantle the valve for cleaning.

ATTENTION: In order to avoid any loss of valve parts, it is recommended to use a small container for the process is dismantling.

- pull out both sealing discs (1)
- carefully push out the valve contents (3-5)
- clean the valve part depending on the degree of dirt either with a washing bottle or with an ultrasonic bath
- insert the sealing disc which is next to the ring marker
- then insert the sapphire seat with the polished side toward the ruby ball
- place the ruby ball in the deeper side of the check guide (5) and put both into the bearing (2) with the ruby ball (4) facing the sapphire seat (3)
- press the second sealing disc on top

After assembling, check the functioning of the valve by blowing air through it. It is possible to blow the air from this side of the ring marker through the valve and it should lock when blowing the other direction.

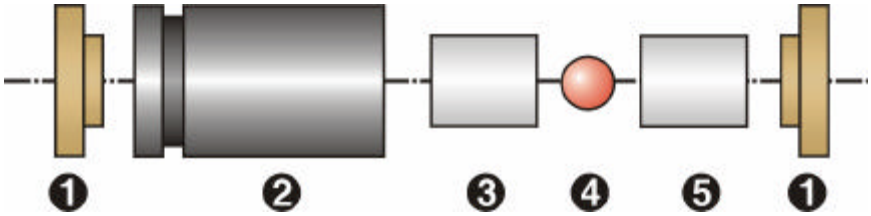

Picture 8: Check Valve Assembly

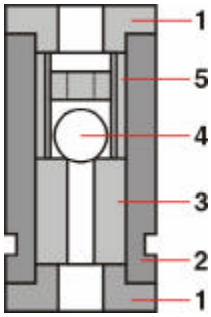

Picture 9: Check Valve Cross-Cut

1 PEEK sealing ring
2 Valve bearing with ring marker
3 Sapphire seat
4 Ruby ball
5 Check guide made of ceramic

9.4 SOFTWARE INITIALIZATION

- Turn off the main switch
- push the [**STOP**] key and turn the main switch on again. Keep the [**STOP**] key pressed until the display indicates that the power is on again. The display shows:

```
Network Address:   1
```

- Normally, keep the Network Address at "**1**". The Network Address is used for the identification of a pump when using RS232 serial control. See below for further information on Serial Control.
- Press the [**PROG**] key again. The following is displayed:

```
Power Down Abort:  0
```

- Please refer to **7.3 POWER DOWN FEATURE** for further information.
- Press the [**PROG**] key again. The following is displayed:

```
HPLC Pump Version 1.37
```

- This display shows the installed Firmware version.
- **IMPORTANT:** With the **PURGE** function ([▲] and [▼] keys) you can enter the **Instrument Configuration Menu**.

9.4.1 INSTRUMENT CONFIGURATION MENU

- The **Instrument Configuration Menu** can by entered from the version **Info Dialog** by pressing the ([▲] and [▼] keys together. The following is displayed:

```
Head Const. a:
1.00
```

- The **Head Constant** is
- Press the [**PROG**] key to switch to the next menu screen.

```
Head Par. ( 4 m/min):
1.00
```

- The **Head Parameter** is
- Press the [**PROG**] key to switch to the next menu screen.

```
Head Span ( 4 ml/min):
1.00
```

- The **Head Span** is
- Press the [**PROG**] key to switch to the next menu screen.

```
Head Par. (10 m/min):
1.00
```

- The **Head Parameter** is
- Press the [**PROG**] key to switch to the next menu screen.

```
Head Span (10 ml/min):
1.00
```

- The **Head Span** is
- Press the [**PROG**] key to switch to the next menu screen.

```
Head Par. (40 m/min):
1.00
```

- The **Head Parameter** is
- Press the [**PROG**] key to switch to the next menu screen.

```
Head Span (40 ml/min):
1.00
```

- The **Head Span** is
- Press the [**PROG**] key to switch to the next menu screen.

```
Zero Speed Adj.,STOP=End
```

- This display marks the end of the instrument parameters.
- Press the [**STOP**] key to switch to the next menu screen.

```
Init Memory? ("Purge")
```

- With the **PURGE** function ([▲] and [▼] keys), you can reset the pump's memory.

Only reset the instrument's memory when problems occur during normal operation and on advice by the manufacturer !

- Press the [**PROG**] key to switch exit the **Instrument Configuration Menu**.

10. SERIAL CONTROL INTERFACE

The RS 232 Serial Control Interface allows the remote control of the HPLC pump by a PC.

10.1 HARDWARE

The Interface (RS-232C) only requires the following 3 wires:

- Common Ground (COM / GND)
- TX Data (TXD)
- RX Data (RXD)

Connection between the pump and a PC is done with a common 1:1 serial cable (not a twisted-wire cable, where RXD is connected with TXD and vice versa !).

10.1.1 COMMUNICATION PARAMETERS

The pump uses the following communication parameters for serial control:

Baud Rate:	9600
Data Bits	8
Stop Bits	1
Parity:	None
Flow Control:	None

10.2 COMMAND LIST

All serial commands are sent as ASCII strings; parameters given as hexadecimal numbers are to be converted to strings before sending (e.g. 0x1F converts to “1F”).

10.2.1 COMMAND FORMAT

Every command sent to the instrument starts with a “**!**”, directly followed by the pump’s address: “**Q**” for Address 1, “**R**” for Address 2, and “**S**” for Address 3.

Command (TxD):	`!Q 06 11 80 0280 E7;`
Answer (RxD):	`* :04 81 13 69`

After the pump receives a correct address, it answers with a “*****”. If there is no answer, the pump address is maybe set to a different value, the communication parameters are not correct, or a wrong cable is used.

After the "*" answer, the actual command is sent. The complete structure is outlined below:

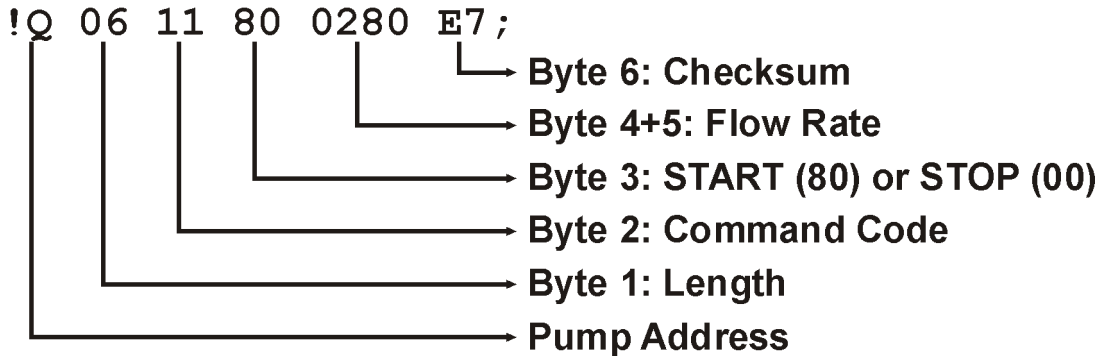

Byte 1	**Length**	This states the total length of the command, including the checksum byte and its own length. Normally, all commands have a length of 6 bytes.
Byte 2	**Command Code**	This states the command to be executed. This can be either a "**11**" for setting a new flow, or a "**10**" for synchronizing a command (see below).
Byte 3	**Remote**	This byte can be either "**80**" for starting the pump, or a "**00**" for stopping it.
Byte 4+5	**Flow Rate**	These two bytes set the flow rate of the pump. The value is scaled from 0x0000 to 0x0C80, where 0xC80 is equal to the highest possible flow rate, depending on installed pump head (e.g. 4, 10, or 40 ml/min).
Byte 6	**Checksum**	This is the checksum of the total command. It is calculated as follows: - add up all command bytes (Byte 1 to 5, except checksum) - the calculate the modulo 256 of the sum, add 1 and invert it. The checksum added to all single bytes should result in a value of 0.

$$\mathrm{INV}\left\{\left[\left(\sum_{i=1}^{n=5}(\mathrm{Byte}_n)\right)\bmod 256\right]+1\right\}$$

Picture 10: Checksum Formula

Every command has to be finished with a "**;**" after the checksum byte.

In case of a wrong checksum, the pump will answer with a "**?**". Otherwise, when the command is correct and understood by the pump it answers with a string:

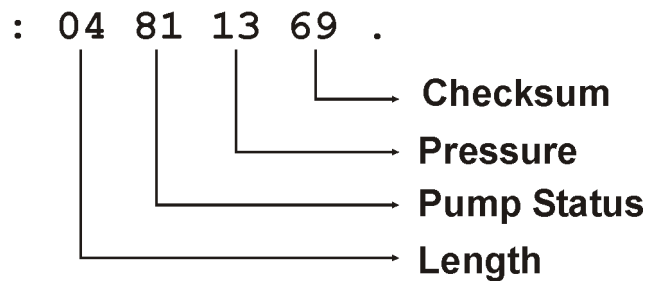

Byte 1	**Length**	This states the total length of the answer, including the checksum byte and its own length. Normally, the answer has a length of 4 bytes.
Byte 2	**Pump Status**	This states the pump's status:

Bit	**Value**
7	Remote start accepted (1 = TRUE)
6	Not used
5	Pressure Failure (1 = TRUE)
4	Not used
3	Not used
2	Pump Head mounted (1 = TRUE)
1	Preparative Pump Head (1 = TRUE)
0	Micro Pump Head (1 = TRUE)

When Bit 0 and 1 are both "0", a Analytical Pump Head is mounted.

Byte 3	**Pressure**	This byte states the current pump pressure. Actual value in MPa is the received byte x 0.2.
Byte 4	**Checksum**	This checksum is calculated as described above.

The answer is always terminated with a "**.**".

10.2.2 COMMAND SYNCHRONIZATION

The command synchronization is used for actually using the transferred flow rate setting. The command is similar to the one described above, but only has a length of 3 bytes:

Command (TxD):	!Q 03 10 ED ;
Answer (RxD):	*

The structure of the command is similar to the one described above, where the first byte is the length (“03”), the second byte the command code (“10”) and the last one a checksum (“ED”), calculated as defined above. As before, the command is terminated with a “**;**”.

The Synchronization Command is sent to the pump after sending the Flow Rate/Start/STOP command described above. This is necessary for the pump to actually execute the send settings. The reason behind this is for the synchronization of 2 or more pump working as a gradient system.

10.2.3 SAFETY FEATURE

The above commands must be repeatedly sent to the pump in intervals of less than 12 seconds to maintain pump operation. In case of not receiving any valid commands within 12 seconds, the pump will automatically stop. This prevents the pump from running without proper software control, e.g. when the computer hangs up.

11. SPARE PARTS & ACCESSORIES

11.1 GENERAL SPARE PARTS

Catalog No.	Part
30 49 001	Li-Battery TEL/P
30 61 007	Power-Line Filter
31 02 001	Transformer
00 00 000	Pressure Sensor (electronic)
31 01 016	Motor w. Optic Decoder
23 02 001	Gear Belt

11.2 PUMP HEAD SPARE PARTS

Catalog No.	Part
25 50 005	Pressure Spring
20 20 033	Guide Bearing
25 01 047	Mounting Plate
25 20 003	Hollow Screws f. Pump Head (M4x40)
20 30 001	Check Valve Cartridge, Complete
26 01 035	Ferrule (PEEK)
25 01 049	Thrust Bolt (Stainless Steel)
24 10 009	Sealing Ring, Relief Valve (Zalak)
24 10 008	Sealing Ring, Relief Valve (Vitone)
26 01 067	Screw, Relief Valve (PEEK)
26 01 069	Thrust Bolt (PVDF)
21 20 040	Fitting, 1/8” (PVDF)
21 20 041	Ferrule, 1/8” (PVDF)

11.2.1 ANALYTICAL, GENERAL

Catalog No.	Part
24 10 015	Sealing Ring (Gray) (Analytical)
24 10 031	Sealing Ring (Yellow) (Analytical)
26 01 032	Piston Guide (Analytical)
24 10 016	Secondary Sealing (Analytical)
26 01 033	Centering Disc (Analytical)
20 20 018	Ceramic Plunger (Analytical)

11.2.2 ANALYTICAL, STAINLESS STEEL

Catalog No.	Part
20 20 038	Pump Head, Analytical, Stainless Steel (Complete)
25 01 068	Pump Head, Analytical, Stainless Steel (Body)
25 01 048	Suction Valve Housing (Stainless Steel)
25 01 050	Pressure Valve Housing (Stainless Steel)
21 90 051	Capillary Damping Plunger (Stainless Steel)
21 90 032	Drain Capillary (Stainless Steel)
21 90 052	Capillary Relief Valve (Stainless Steel)
25 01 071	Block, Relief Valve (Steel)

11.2.3 ANALYTICAL, PEEK

Catalog No.	Part
20 20 039	Pump Head, Analytical, PEEK (Complete)
26 01 068	Pump Head, Analytical, PEEK (Body)
26 01 038	Suction Valve Housing (PEEK)
26 01 039	Pressure Valve Housing (PEEK)
21 90 059	Capillary Damping Plunger (PEEK)
21 90 035	Drain Capillary (PEEK)
21 90 054	Capillary Relief Valve (PEEK)
26 01 072	Block, Relief Valve (PEEK)

11.2.4 SEMI-PREPARATIVE, GENERAL

Catalog No.	Part
24 10 018	Sealing Ring (Gray) (Semi-Prep)
24 10 032	Sealing Ring (Yellow) (Semi-Prep)
26 01 043	Piston Guide (Semi-Prep)
24 10 019	Secondary Sealing (Semi-Prep)
26 01 044	Centering Disc (Semi-Prep)
20 20 020	Ceramic Plunger (Semi-Prep)

11.2.5 SEMI-PREPARATIVE, STAINLESS STEEL

Catalog No.	Part
20 20 042	Pump Head, Semi-Prep., Stainless Steel (Complete)
25 01 059	Pump Head, Semi-Prep., Stainless Steel (Body)

11.2.6 SEMI-PREPARATIVE, PEEK

Catalog No.	Part
20 20 043	Pump Head, Semi-Prep., PEEK (Complete)
26 01 070	Pump Head, Semi-Prep., PEEK (Body)

11.2.7 MICRO, GENERAL

Catalog No.	Part
24 10 020	Sealing Ring (Gray) (Micro)
24 10 030	Sealing Ring (Yellow) (Micro)
26 01 047	Piston Guide (Micro)
24 10 021	Secondary Sealing (Micro)
26 01 048	Centering Disc (Micro)
20 20 019	Ceramic Plunger (Micro)

11.2.8 MICRO, STAINLESS STEEL

Catalog No.	Part
20 20 040	Pump Head, Micro, Stainless Steel (Complete)
25 01 070	Pump Head, Micro, Stainless Steel (Body)

11.2.9 MICRO, PEEK

Catalog No.	Part
20 20 041	Pump Head, Micro, PEEK (Complete)
26 01 071	Pump Head, Micro, PEEK (Body)

11.3 CHECK VALVE PARTS

Catalog No.	Part
25 01 056	Valve Bearing
40 20 003	Sapphire Seat
40 21 002	Ruby Ball
40 22 001	Ceramic Check Guide
26 01 024	Disc, PEEK